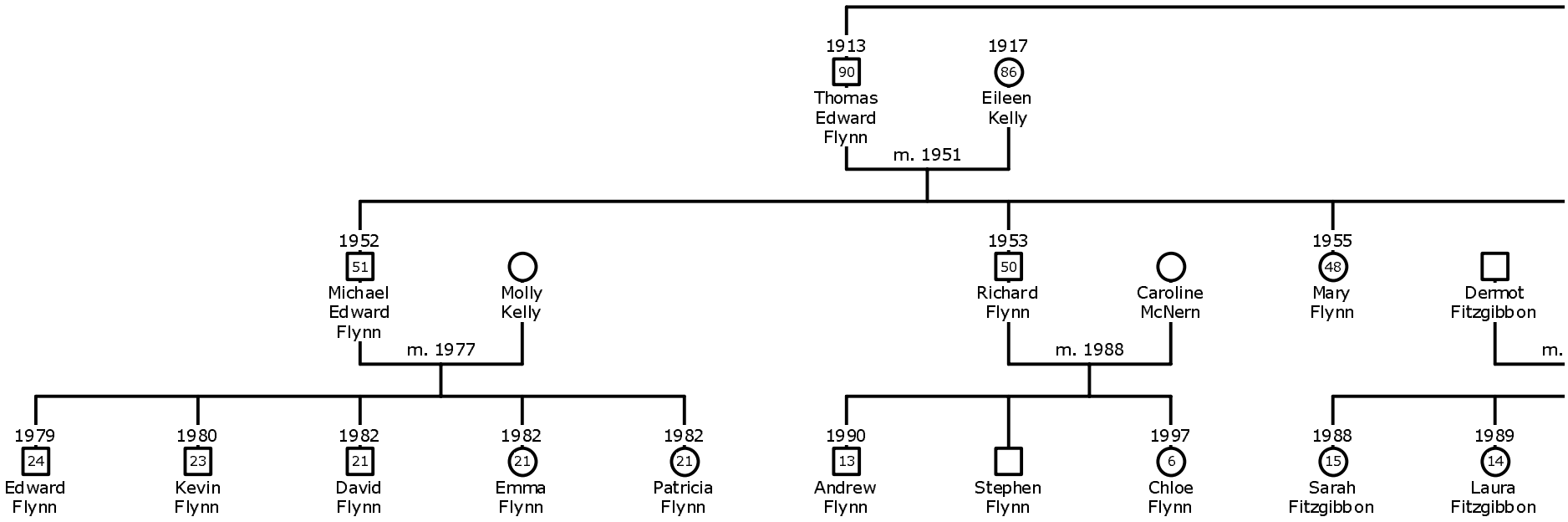
1913
90
Thomas Edward Flynn
1917
86
Eileen Kelly
m. 1951
1952
51
Michael Edward Flynn
Molly Kelly
m. 1977
1953
50
Richard Flynn
Caroline McNern
m. 1988
1955
48
Mary Flynn
Dermot Fitzgibbon
m.
1979
24
Edward Flynn
1980
23
Kevin Flynn
1982
21
David Flynn
1982
21
Emma Flynn
1982
21
Patricia Flynn
1990
13
Andrew Flynn
Stephen Flynn
1997
6
Chloe Flynn
1988
15
Sarah Fitzgibbon
1989
14
Laura Fitzgibbon

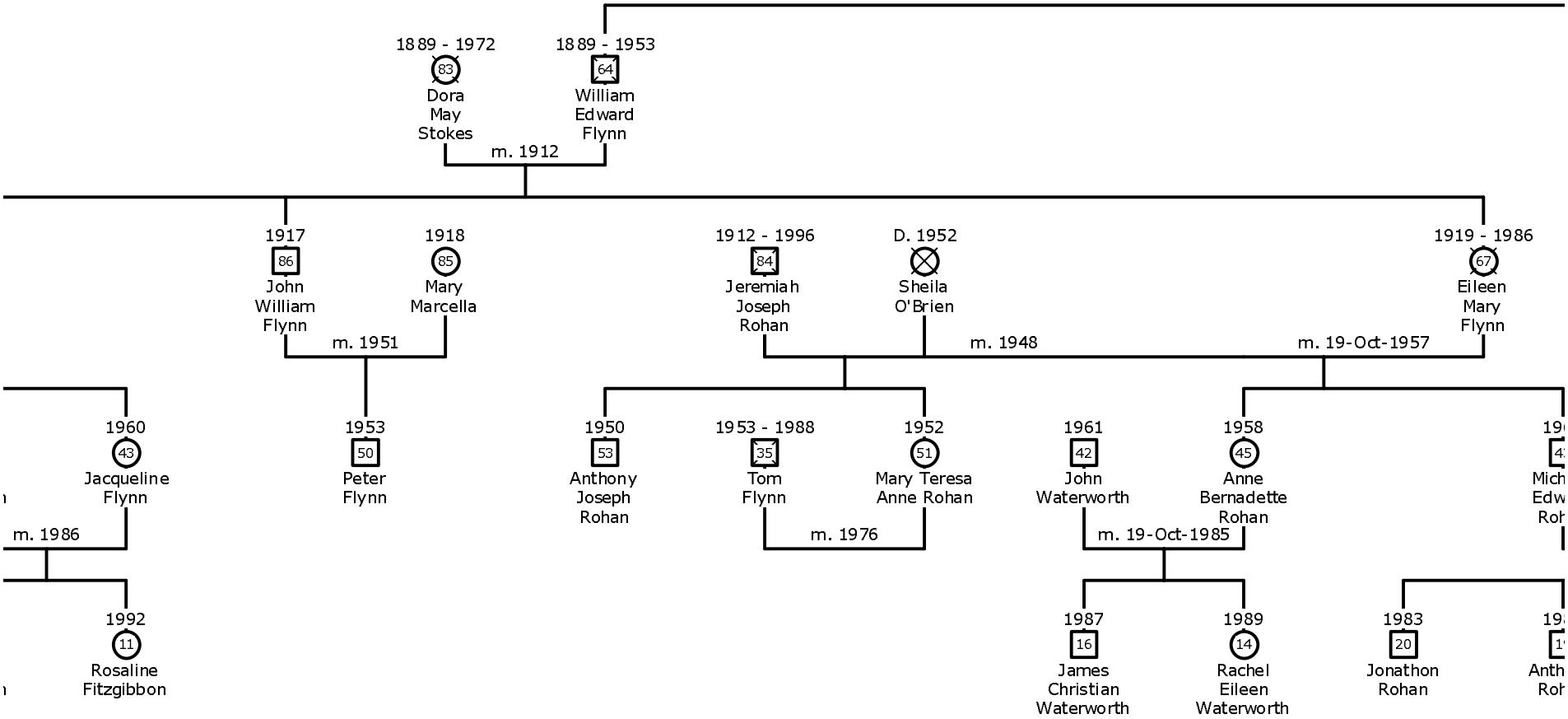
1889 - 1972
83
Dora May Stokes
1889 - 1953
64
William Edward Flynn
m. 1912
1917
86
John William Flynn
1918
85
Mary Marcella
m. 1951
1912 - 1996
84
Jeremiah Joseph Rohan
D. 1952
Sheila O'Brien
m. 1948
1919 - 1986
67
Eileen Mary Flynn
m. 19-Oct-1957
1960
43
Jacqueline Flynn
m. 1986
1992
11
Rosaline Fitzgibbon
1953
50
Peter Flynn
1950
53
Anthony Joseph Rohan
1953 - 1988
35
Tom Flynn
1952
51
Mary Teresa Anne Rohan
m. 1976
1961
42
John Waterworth
1958
45
Anne Bernadette Rohan
m. 19-Oct-1985
1987
16
James Christian Waterworth
1989
14
Rachel Eileen Waterworth
1983
20
Jonathon Rohan

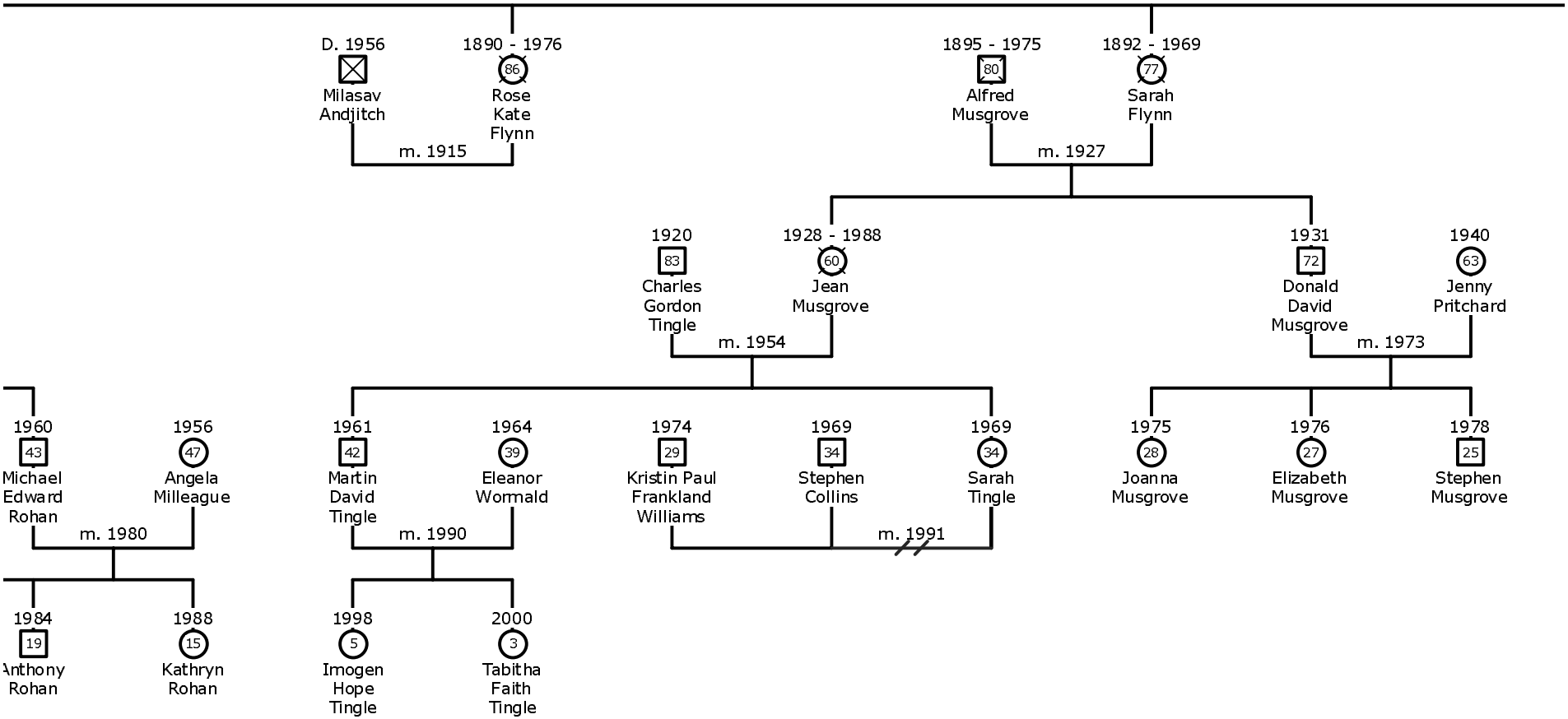
D. 1956
Milasav Andjitch
1890 - 1976
86
Rose Kate Flynn
m. 1915
1895 - 1975
80
Alfred Musgrove
1892 - 1969
77
Sarah Flynn
m. 1927
1920
83
Charles Gordon Tingle
1928 - 1988
60
Jean Musgrove
m. 1954
1931
72
Donald David Musgrove
1940
63
Jenny Pritchard
m. 1973
1960
43
Michael Edward Rohan
1956
47
Angela Milleague
m. 1980
1961
42
Martin David Tingle
1964
39
Eleanor Wormald
m. 1990
1974
29
Kristin Paul Frankland Williams
1969
34
Stephen Collins
1969
34
Sarah Tingle
m. 1991
1975
28
Joanna Musgrove
1976
27
Elizabeth Musgrove
1978
25
Stephen Musgrove
1984
19
Anthony Rohan
1988
15
Kathryn Rohan
1998
5
Imogen Hope Tingle
2000
3
Tabitha Faith Tingle

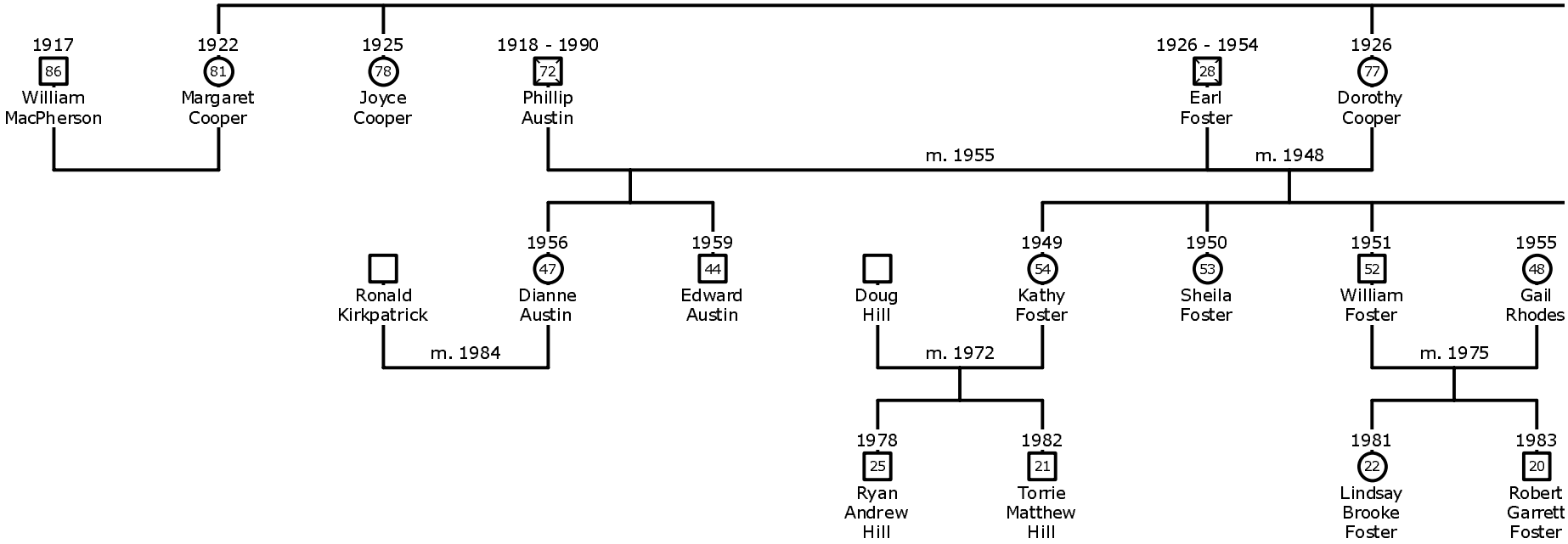
1917
86
William MacPherson
1922
81
Margaret Cooper
1925
78
Joyce Cooper
1918 - 1990
72
Phillip Austin
1926 - 1954
28
Earl Foster
1926
77
Dorothy Cooper
m. 1955
m. 1948
1956
47
Dianne Austin
1959
44
Edward Austin
Ronald Kirkpatrick
m. 1984
1949
54
Kathy Foster
1950
53
Sheila Foster
1951
52
William Foster
1955
48
Gail Rhodes
Doug Hill
m. 1972
m. 1975
1978
25
Ryan Andrew Hill
1982
21
Torrie Matthew Hill
1981
22
Lindsay Brooke Foster
1983
20
Robert Garrett Foster

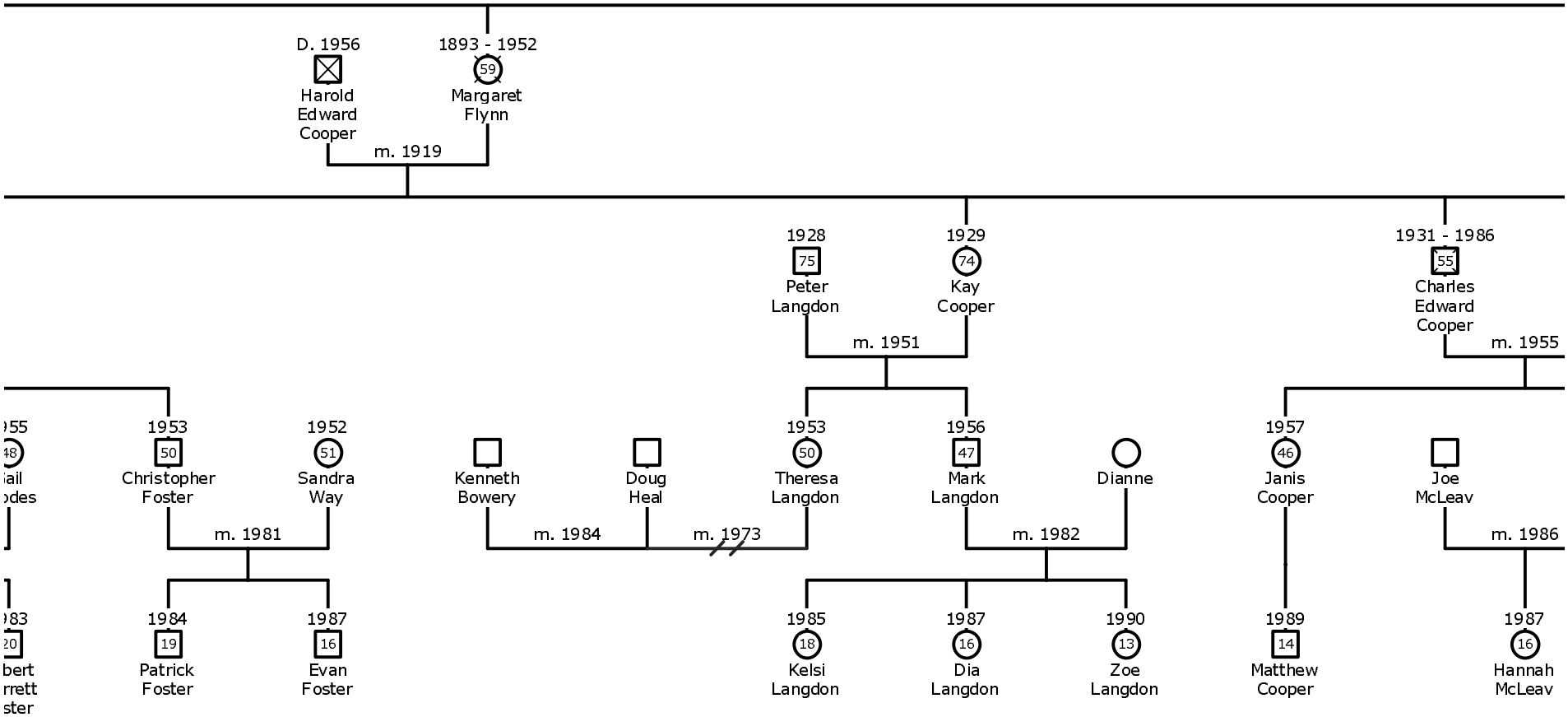
D. 1956
Harold Edward Cooper
1893 - 1952
59
Margaret Flynn
m. 1919
1928
75
Peter Langdon
1929
74
Kay Cooper
1931 - 1986
55
Charles Edward Cooper
m. 1951
m. 1955
1953
50
Christopher Foster
1952
51
Sandra Way
Kenneth Bowery
Doug Heal
1953
50
Theresa Langdon
1956
47
Mark Langdon
Dianne
1957
46
Janis Cooper
Joe McLeav
m. 1981
m. 1984
m. 1973
m. 1982
m. 1986
1984
19
Patrick Foster
1987
16
Evan Foster
1985
18
Kelsi Langdon
1987
16
Dia Langdon
1990
13
Zoe Langdon
1989
14
Matthew Cooper
1987
16
Hannah McLeav

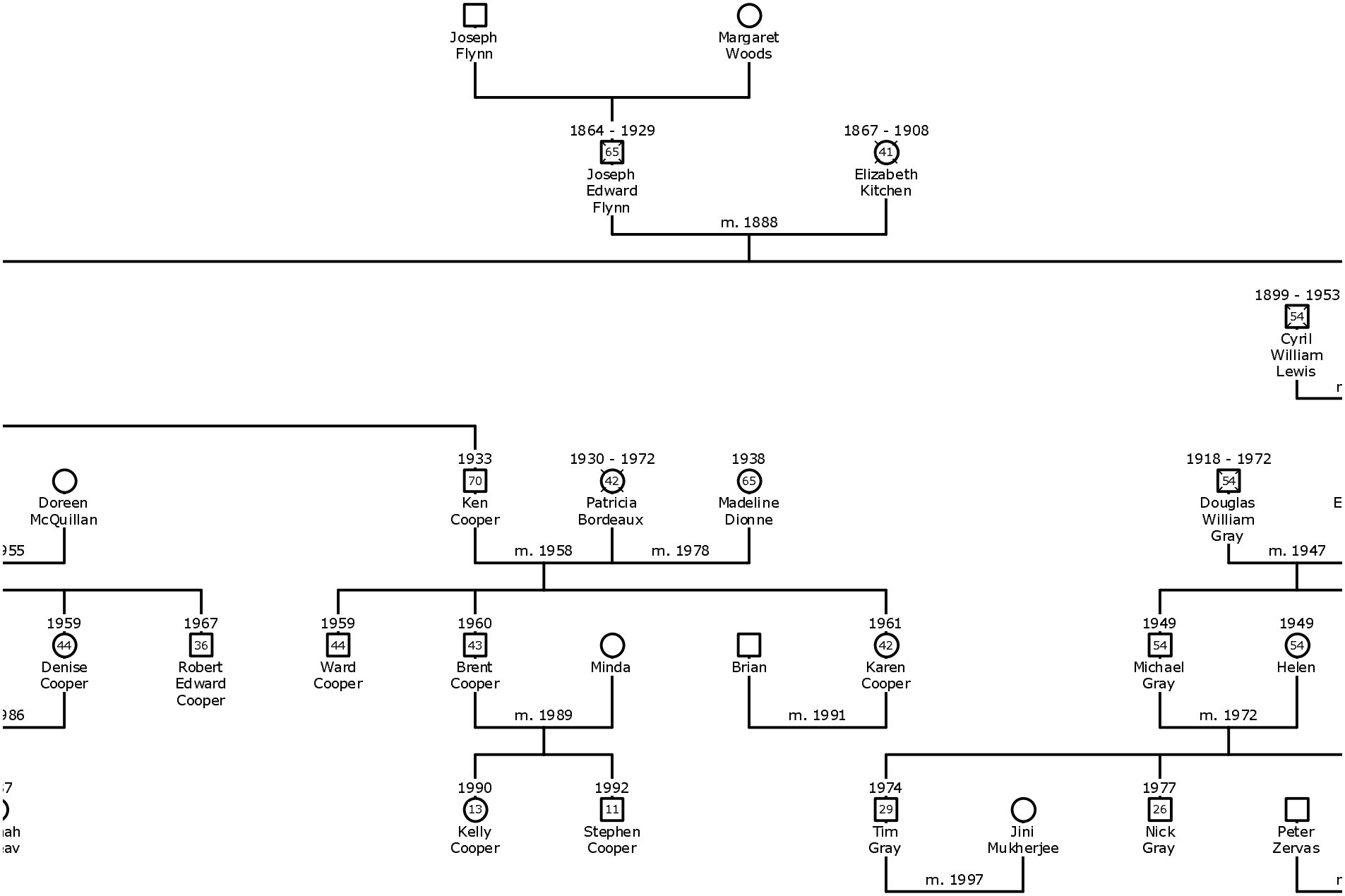
Joseph Flynn
Margaret Woods
1864 - 1929
65
Joseph Edward Flynn
1867 - 1908
41
Elizabeth Kitchen
m. 1888
1899 - 1953
54
Cyril William Lewis
Doreen McQuillan
1933
70
Ken Cooper
1930 - 1972
42
Patricia Bordeaux
1938
65
Madeline Dionne
m. 1958
m. 1978
1918 - 1972
54
Douglas William Gray
m. 1947
1959
44
Denise Cooper
1967
36
Robert Edward Cooper
1959
44
Ward Cooper
1960
43
Brent Cooper
Minda
Brian
1961
42
Karen Cooper
m. 1989
m. 1991
1949
54
Michael Gray
1949
54
Helen
m. 1972
1990
13
Kelly Cooper
1992
11
Stephen Cooper
1974
29
Tim Gray
Jini Mukherjee
1977
26
Nick Gray
Peter Zervas
m. 1997

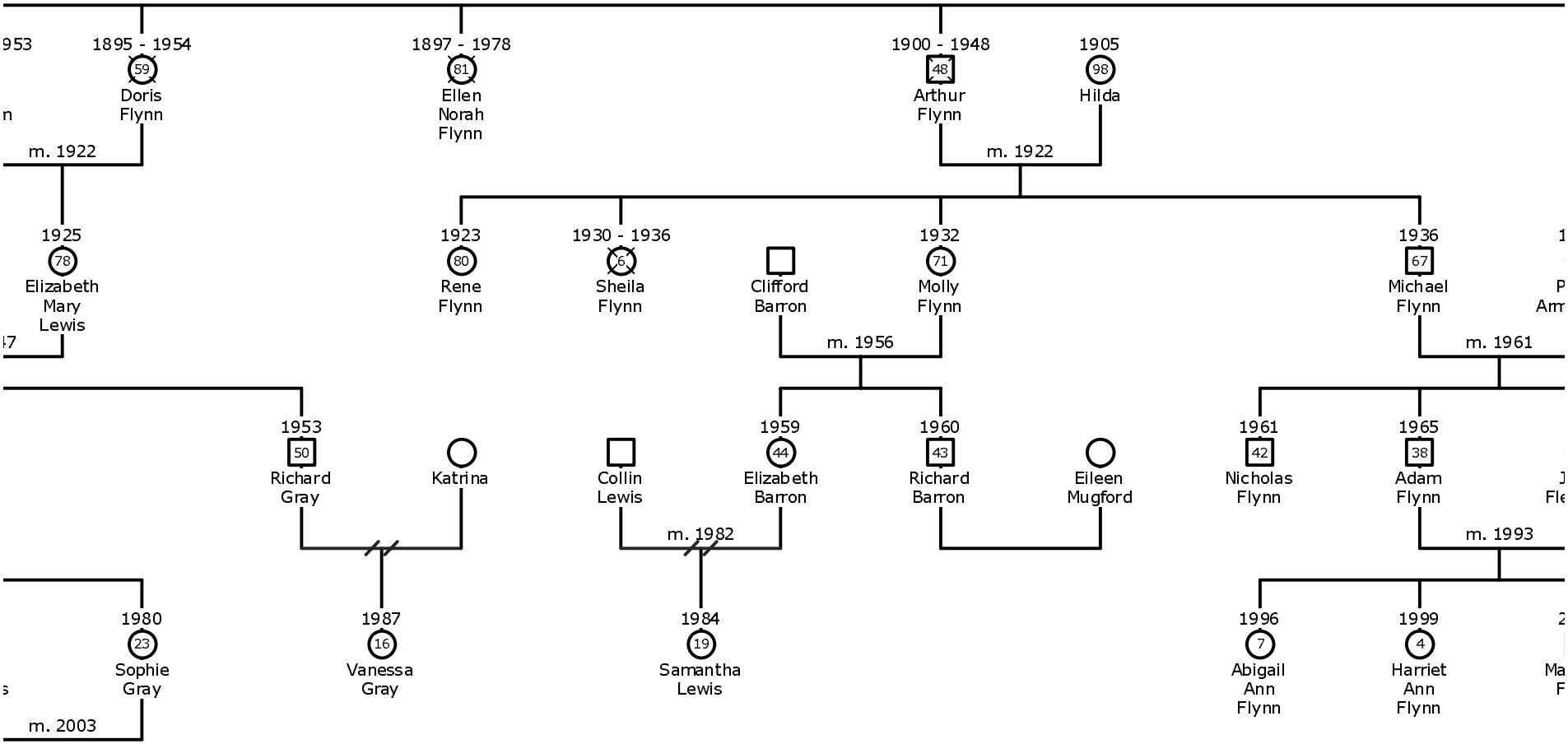
953
1895 - 1954
59
Doris
Flynn
n
m. 1922
1925
78
Elizabeth
Mary
Lewis
47
1897 - 1978
81
Ellen
Norah
Flynn
1900 - 1948
48
Arthur
Flynn
1905
98
Hilda
m. 1922
1923
80
Rene
Flynn
1930 - 1936
6
Sheila
Flynn
Clifford
Barron
1932
71
Molly
Flynn
1936
67
Michael
Flynn
m. 1956
m. 1961
1953
50
Richard
Gray
Katrina
Collin
Lewis
1959
44
Elizabeth
Barron
1960
43
Richard
Barron
Eileen
Mugford
1961
42
Nicholas
Flynn
1965
38
Adam
Flynn
m. 1982
m. 1993
1980
23
Sophie
Gray
m. 2003
1987
16
Vanessa
Gray
1984
19
Samantha
Lewis
1996
7
Abigail
Ann
Flynn
1999
4
Harriet
Ann
Flynn

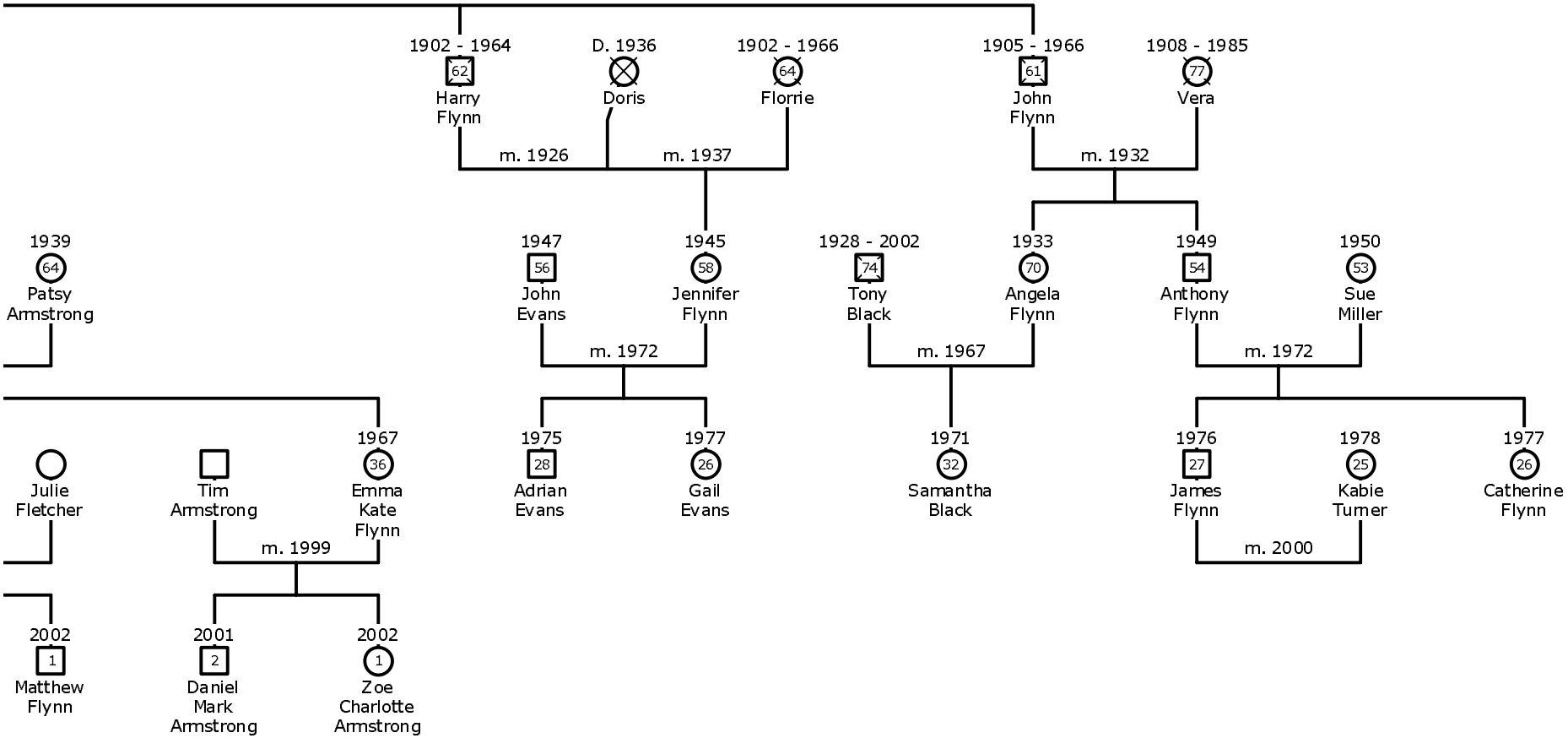
1902 - 1964
62
Harry Flynn
D. 1936
Doris
1902 - 1966
64
Florrie
1905 - 1966
61
John Flynn
1908 - 1985
77
Vera
m. 1926
m. 1937
m. 1932
1939
64
Patsy Armstrong
1947
56
John Evans
1945
58
Jennifer Flynn
1928 - 2002
74
Tony Black
1933
70
Angela Flynn
1949
54
Anthony Flynn
1950
53
Sue Miller
m. 1972
m. 1967
m. 1972
Julie Fletcher
Tim Armstrong
1967
36
Emma Kate Flynn
1975
28
Adrian Evans
1977
26
Gail Evans
1971
32
Samantha Black
1976
27
James Flynn
1978
25
Kabie Turner
1977
26
Catherine Flynn
m. 1999
m. 2000
2002
1
Matthew Flynn
2001
2
Daniel Mark Armstrong
2002
1
Zoe Charlotte Armstrong