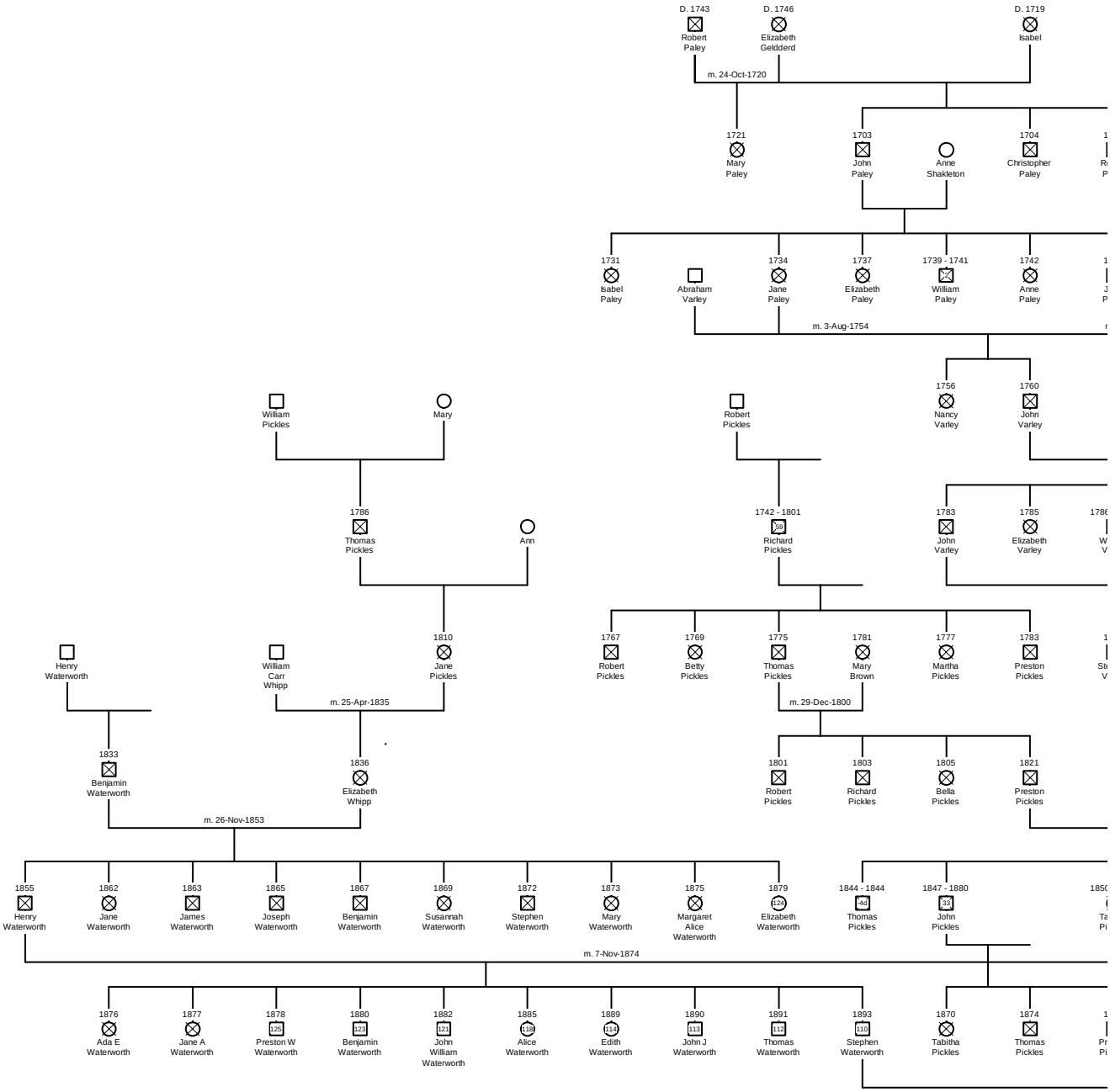
D. 1743
Robert Paley
D. 1746
Elizabeth Geldderd
D. 1719
Isabel
m. 24-Oct-1720
1721
Mary Paley
1703
John Paley
Anne Shakleton
1704
Christopher Paley
1731
Isabel Paley
Abraham Varley
1734
Jane Paley
1737
Elizabeth Paley
1739 - 1741
William Paley
1742
Anne Paley
m. 3-Aug-1754
1756
Nancy Varley
1760
John Varley
William Pickles
Mary
Robert Pickles
1786
Thomas Pickles
Ann
1742 - 1801
Richard Pickles
1783
John Varley
1785
Elizabeth Varley
1810
Jane Pickles
1767
Robert Pickles
1769
Betty Pickles
1775
Thomas Pickles
1781
Mary Brown
1777
Martha Pickles
1783
Preston Pickles
Henry Waterworth
William Carr Whipp
m. 25-Apr-1835
m. 29-Dec-1800
1833
Benjamin Waterworth
1836
Elizabeth Whipp
1801
Robert Pickles
1803
Richard Pickles
1805
Bella Pickles
1821
Preston Pickles
m. 26-Nov-1853
1855
Henry Waterworth
1862
Jane Waterworth
1863
James Waterworth
1865
Joseph Waterworth
1867
Benjamin Waterworth
1869
Susannah Waterworth
1872
Stephen Waterworth
1873
Mary Waterworth
1875
Margaret Alice Waterworth
1879
Elizabeth Waterworth
1844 - 1844
Thomas Pickles
1847 - 1880
John Pickles
m. 7-Nov-1874
1876
Ada E Waterworth
1877
Jane A Waterworth
1878
Preston W Waterworth
1880
Benjamin Waterworth
1882
John William Waterworth
1885
Alice Waterworth
1889
Edith Waterworth
1890
John J Waterworth
1891
Thomas Waterworth
1893
Stephen Waterworth
1870
Tabitha Pickles
1874
Thomas Pickles

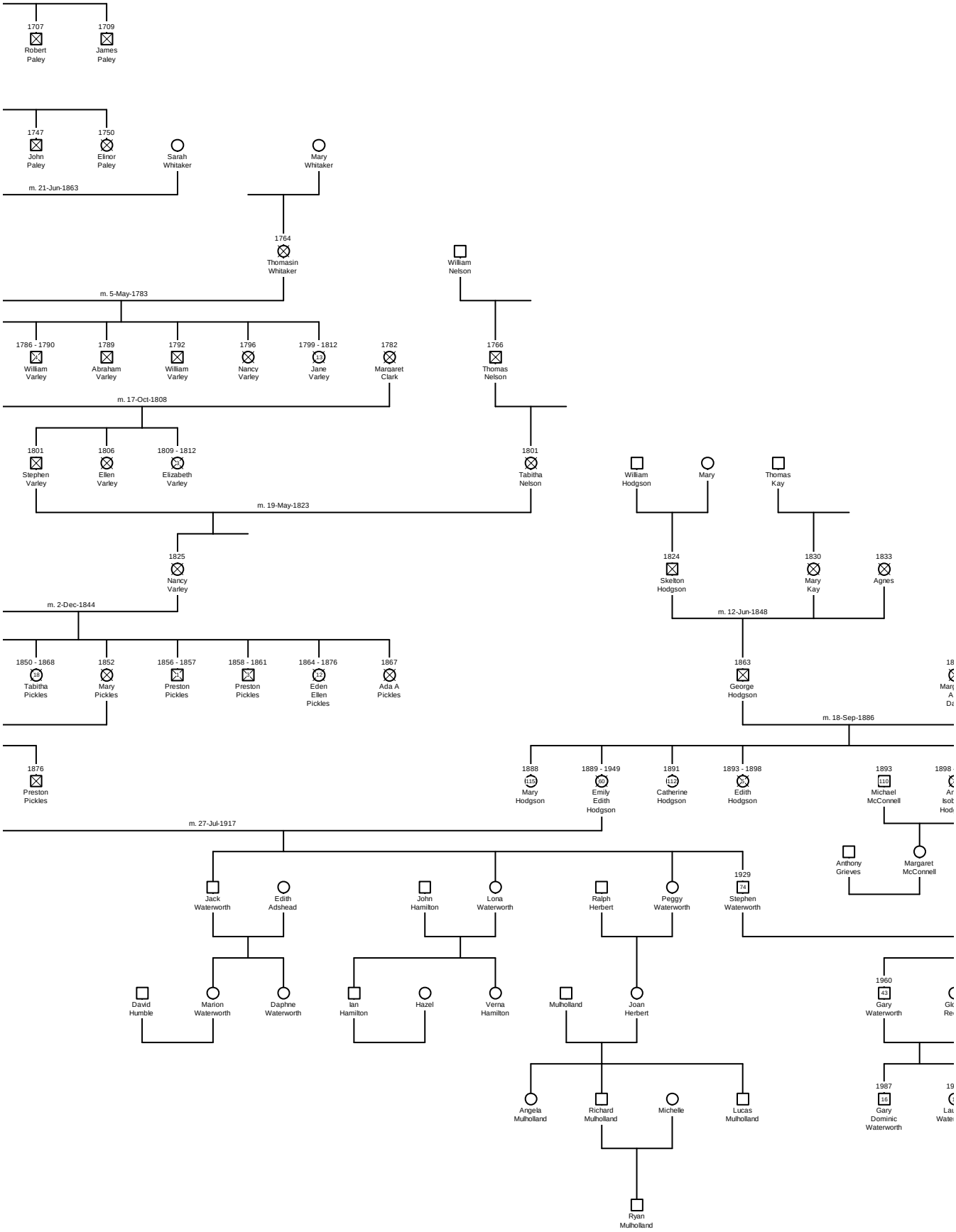
1707
Robert Paley
1709
James Paley
1747
John Paley
1750
Elinor Paley
Sarah Whitaker
Mary Whitaker
m. 21-Jun-1863
1764
Thomasin Whitaker
William Nelson
m. 5-May-1783
1786 - 1790
William Varley
1789
Abraham Varley
1792
William Varley
1796
Nancy Varley
1799 - 1812
Jane Varley
1782
Margaret Clark
1766
Thomas Nelson
m. 17-Oct-1808
1801
Stephen Varley
1806
Ellen Varley
1809 - 1812
Elizabeth Varley
1801
Tabitha Nelson
William Hodgson
Mary
Thomas Kay
m. 19-May-1823
1825
Nancy Varley
1824
Skelton Hodgson
1830
Mary Kay
1833
Agnes
m. 2-Dec-1844
m. 12-Jun-1848
1850 - 1868
Tabitha Pickles
1852
Mary Pickles
1856 - 1857
Preston Pickles
1858 - 1861
Preston Pickles
1864 - 1876
Eden Ellen Pickles
1867
Ada A Pickles
1863
George Hodgson
m. 18-Sep-1886
1876
Preston Pickles
1888
Mary Hodgson
1889 - 1949
Emily Edith Hodgson
1891
Catherine Hodgson
1893 - 1898
Edith Hodgson
1893
Michael McConnell
Anthony Grieves
Margaret McConnell
m. 27-Jul-1917
Jack Waterworth
Edith Adshead
John Hamilton
Lona Waterworth
Ralph Herbert
Peggy Waterworth
1929
Stephen Waterworth
David Humble
Marion Waterworth
Daphne Waterworth
Ian Hamilton
Hazel
Verna Hamilton
Mulholland
Joan Herbert
1960
Gary Waterworth
1987
Gary Dominic Waterworth
Angela Mulholland
Richard Mulholland
Michelle
Lucas Mulholland
Ryan Mulholland

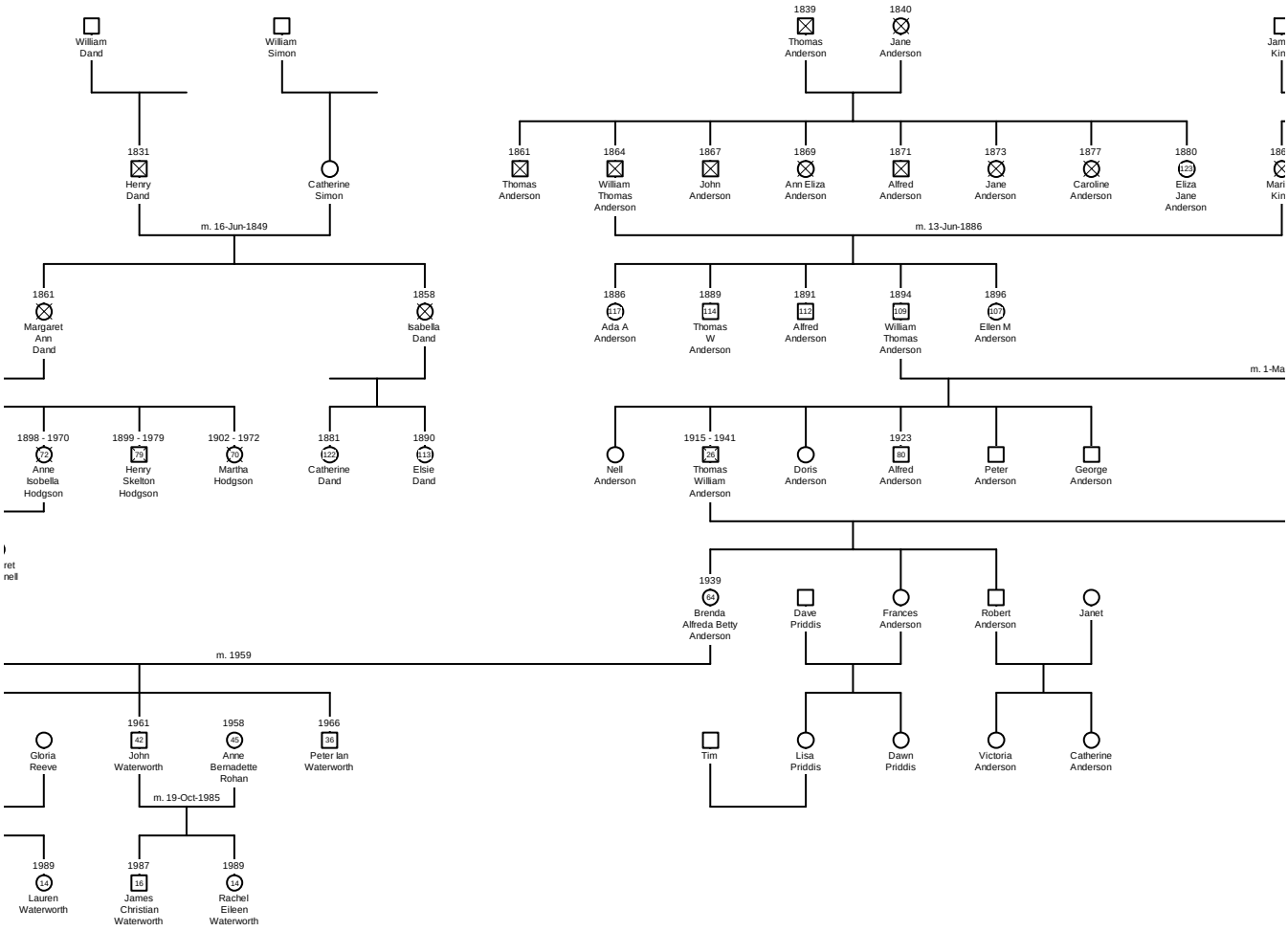
William Dand
William Simon
1839 Thomas Anderson
1840 Jane Anderson
1831 Henry Dand
Catherine Simon
1861 Thomas Anderson
1864 William Thomas Anderson
1867 John Anderson
1869 Ann Eliza Anderson
1871 Alfred Anderson
1873 Jane Anderson
1877 Caroline Anderson
1880 123 Eliza Jane Anderson
m. 16-Jun-1849
m. 13-Jun-1886
1861 Margaret Ann Dand
1858 Isabella Dand
1886 117 Ada A Anderson
1889 114 Thomas W Anderson
1891 112 Alfred Anderson
1894 109 William Thomas Anderson
1896 107 Ellen M Anderson
1898 - 1970 72 Anne Isobella Hodgson
1899 - 1979 79 Henry Skelton Hodgson
1902 - 1972 70 Martha Hodgson
1881 122 Catherine Dand
1890 113 Elsie Dand
Nell Anderson
1915 - 1941 26 Thomas William Anderson
Doris Anderson
1923 80 Alfred Anderson
Peter Anderson
George Anderson
1939 64 Brenda Alfreda Betty Anderson
Dave Priddis
Frances Anderson
Robert Anderson
Janet
m. 1959
Gloria Reeve
1961 42 John Waterworth
1958 45 Anne Bernadette Rohan
1966 36 Peter Ian Waterworth
Tim
Lisa Priddis
Dawn Priddis
Victoria Anderson
Catherine Anderson
m. 19-Oct-1985
1989 14 Lauren Waterworth
1987 16 James Christian Waterworth
1989 14 Rachel Eileen Waterworth

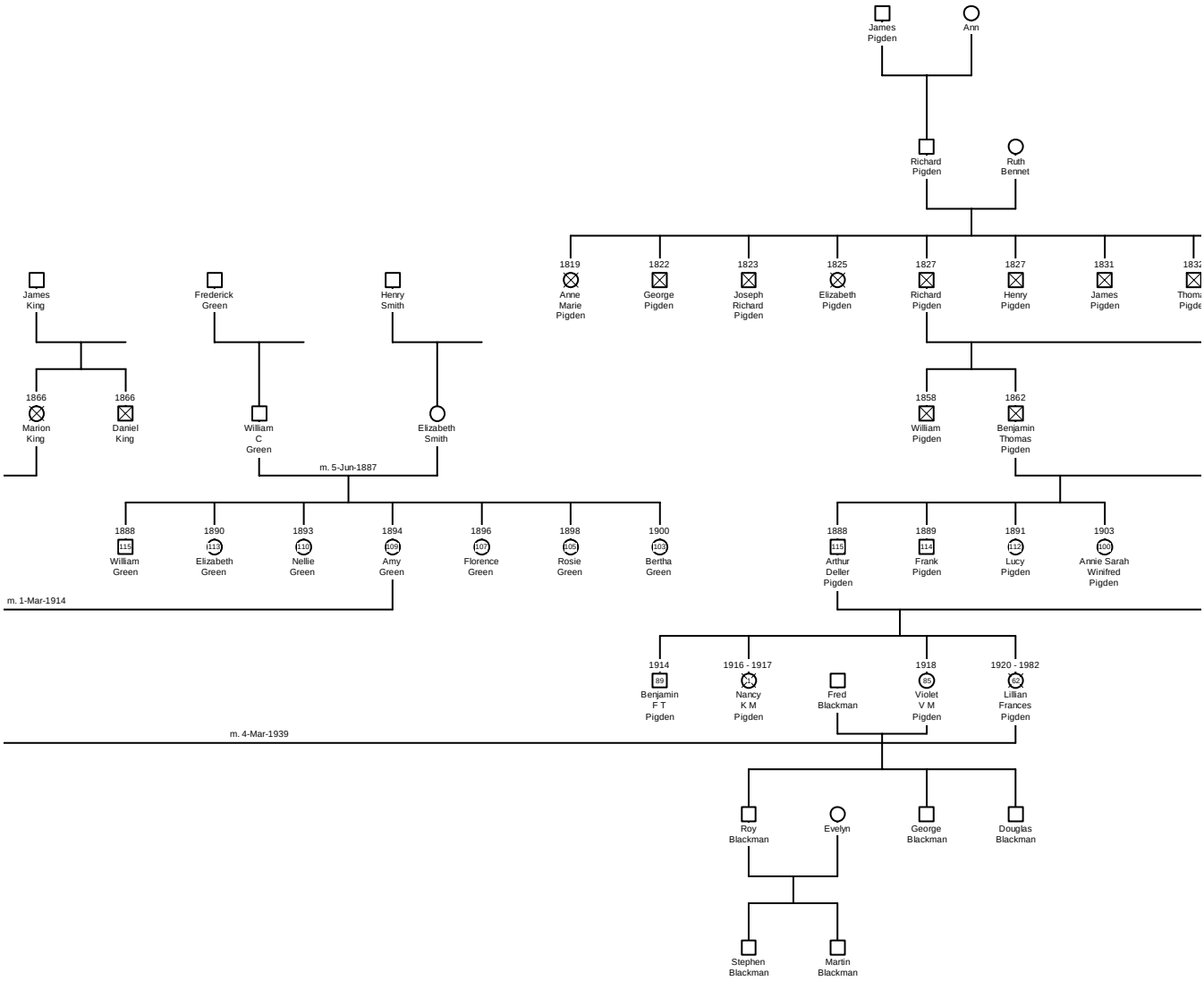
James Pigden
Ann
Richard Pigden
Ruth Bennet
1819 Anne Marie Pigden
1822 George Pigden
1823 Joseph Richard Pigden
1825 Elizabeth Pigden
1827 Richard Pigden
1827 Henry Pigden
1831 James Pigden
James King
Frederick Green
Henry Smith
1866 Marion King
1866 Daniel King
William C Green
Elizabeth Smith
1858 William Pigden
1862 Benjamin Thomas Pigden
m. 5-Jun-1887
1888 115 William Green
1890 113 Elizabeth Green
1893 110 Nellie Green
1894 109 Amy Green
1896 107 Florence Green
1898 106 Rosie Green
1900 103 Bertha Green
1888 115 Arthur Deller Pigden
1889 114 Frank Pigden
1891 112 Lucy Pigden
1903 100 Annie Sarah Winifred Pigden
m. 1-Mar-1914
1914 89 Benjamin F T Pigden
1916 - 1917 21 Nancy K M Pigden
Fred Blackman
1918 85 Violet V M Pigden
1920 - 1982 62 Lillian Frances Pigden
m. 4-Mar-1939
Roy Blackman
Evelyn
George Blackman
Douglas Blackman
Stephen Blackman
Martin Blackman

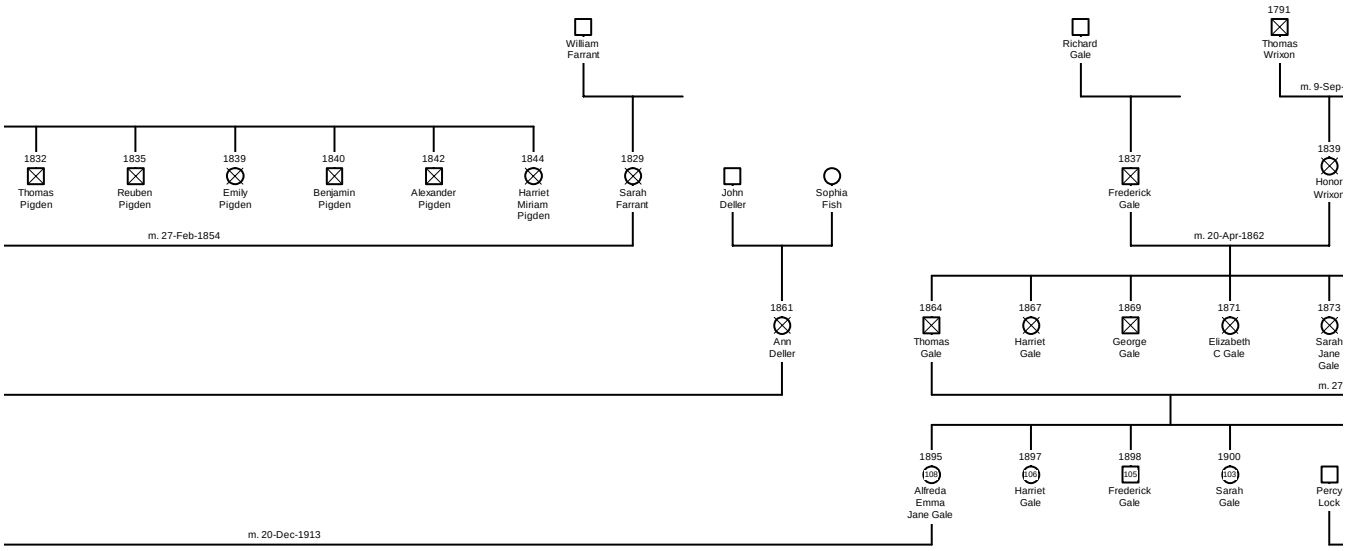
William Farrant
Richard Gale
1791
Thomas Wrixon
m. 9-Sep-
1832
Thomas Pigden
1835
Reuben Pigden
1839
Emily Pigden
1840
Benjamin Pigden
1842
Alexander Pigden
1844
Harriet Miriam Pigden
1829
Sarah Farrant
John Deller
Sophia Fish
1837
Frederick Gale
1839
Honor Wrixor
m. 27-Feb-1854
m. 20-Apr-1862
1861
Ann Deller
1864
Thomas Gale
1867
Harriet Gale
1869
George Gale
1871
Elizabeth C Gale
1873
Sarah Jane Gale
m. 27
1895
108
Alfreda Emma Jane Gale
1897
106
Harriet Gale
1898
105
Frederick Gale
1900
103
Sarah Gale
Percy Lock
m. 20-Dec-1913

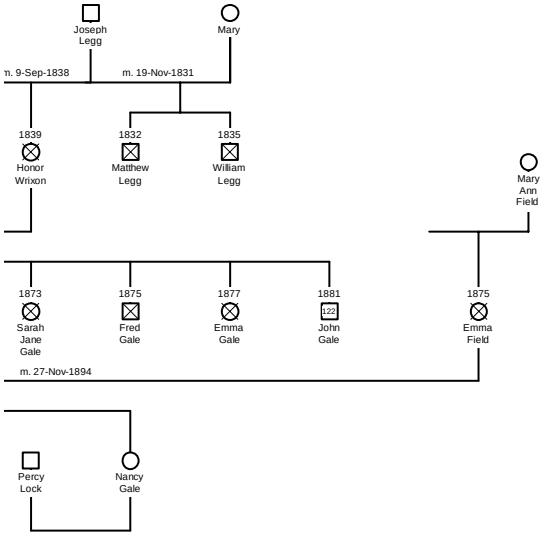
Joseph Legg
Mary
m. 9-Sep-1838
m. 19-Nov-1831
1839
Honor Wrixon
1832
Matthew Legg
1835
William Legg
Mary Ann Field
1873
Sarah Jane Gale
1875
Fred Gale
1877
Emma Gale
1881
122
John Gale
1875
Emma Field
m. 27-Nov-1894
Percy Lock
Nancy Gale